KUZMA

Since 1983

Kuzma turntables and tonearms have been praised worldwide by the audio community since 1983.

We firmly believe in solid construction achieved by the use of high quality materials and precision engineering in every part of our turntables and tonearms. We aim to mimic the process that takes place when records are cut, so that our products extract the maximum music from the grooves of a vinyl record. We use solid, non resonant materials such as aluminium, brass and acrylic, designed in forms and structures that emphasise rigidity, damping and insulation. Only the best available parts and materials are used for bearings, shafts, wires, connectors and screws. Our products incorporate many of our own original and innovative designs, such as special bearing construction with selected bearing materials, diamond polished carbon steel shafts, a unique mat material, non resonant construction, damping suspension, special adhesives and handmade assemblies.

Contents

Stabi S

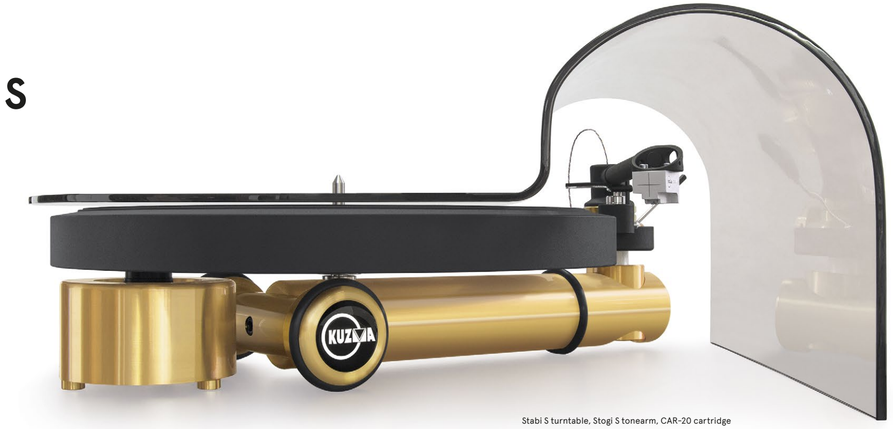

Stabi S turntable, Stogi S tonearm, CAR-20 cartridge

Stabi S (9″ arm)

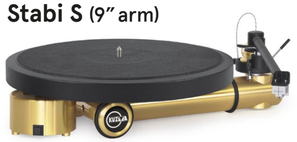

Stabi S turntable, Stogi S tonearm, CAR-20 cartridge

Stabi S12 (12″ arm)

Stabi S12 turntable, Stogi S 12 tonearm, CAR-20 cartridge

The STABI S is Kuzma's most affordable turntable, the gateway to really reproducing music from analogue records, yet its performance is anything but entry level.

Key components are shared with our high-end designs, married to a carefully simplified structure that combines materials and construction, to deliver minimal musical compromise.

The solid aluminium platter is precision machined, carefully profiled, internally damped and topped with Kuzma's unique, hybrid rubber and textile mat, in order to maximise rotational stability and dissipate the energy generated by record replay. The dense and rigid T-shaped chassis guarantees the crucial mechanical relationship between the main bearing and tonearm mount. Constructed from massive, solid brass rods, they give the whole turntable structural rigidity, mass to dissipate internally generated energy and a reassuring stability.

The platter spins on a diamond polished, fine grain carbon steel bearing shaft that's fitted into a zero play, low-noise resin/nylon sleeve. This provides low friction surfaces with excellent non-resonant and self-damping properties. A precisely machined, flat rubber belt, driven by an AC motor mounted in its own independent, high-mass brass housing, ensures smooth, stable rotation.

Despite its simple elegance and minimalist form-factor, the STABI S design is flexible and can be upgraded (or ordered) to accommodate multiple arms and a sophisticated external motor power supply. The result is a turntable with performance that belies its modest price, performance that is worthy of even the most ambitious audio systems.

Finishes (all Stabi S and Stabi SD models)

Black color finish
(black or brass finish is standard)

RAL color finish
(optional)

Specifications

Total mass	13 kg
Platter mass	4,8 kg
Platter material	Aluminium
Shaft diameter	10 mm
Drive	Flat rubber belt
Motor	AC
Chassis/Levelling	Solid Brass/No
External PSU	Optional
No. of tonearms	1 (9″ or 12″)
Suspended	No
Dimensions	400 x 300 x 170 mm

Options (all Stabi S and Stabi SD models)

External power supply

Armboards
(brass or black finish)

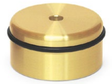

Clamp
(brass or black finish)

Stabi SD

Variants (platter and motor included)

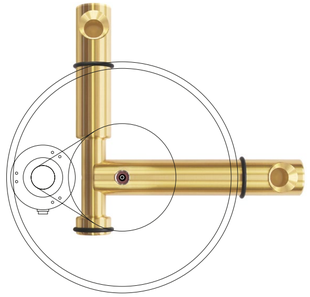

Stabi SD (9″+9″)

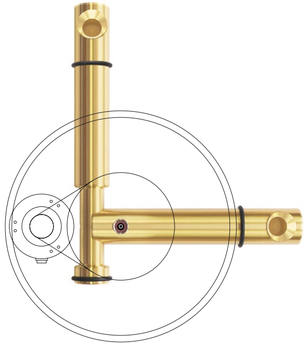

Stabi S9D12 (9″+12″)

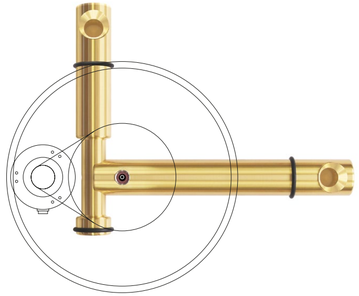

Stabi S12D9 (12″+9″)

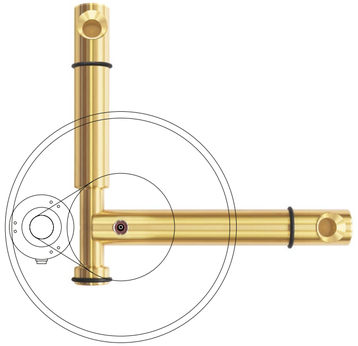

Stabi S12D12 (12″+12″)

The STABI SD is a development of the original, minimalist STABI S design, based on exactly the same, carefully chosen materials and overall structure.

The dynamic elements are unchanged, the SD using the proven damped aluminium platter and hybrid record mat, close tolerance, ultra-quiet bearing, AC motor and precision ground, flat belt of the original design: a design so good that it found its way into some seriously high-end systems, systems where users wanted to fit a second tonearm, to run a different cartridge or for dedicated mono replay. Extending the cross beam of the solid brass T-shaped chassis has allowed us to mount that second tonearm, while maintaining the integrity and construction of the original design, creating a solution that is both modular and upgradable.

The SD chassis option is compatible with both 9″ and 12″ arms in any combination. It also uses the same externally mounted, mass-loaded motor housing as the S, making it compatible with the optional external PSU. But best of all, a basic STABI S can be upgraded by stages, over time, to a full SD with external supply and two tonearms, allowing your turntable and record replay to grow and develop with your system.

Note: tonearm effective length(s) must be specified at the time of ordering (although this too can be changed if circumstances demand).

Specifications

Total mass	16 kg
Platter mass	4,8 kg
Platter material	Aluminium
Shaft diameter	10 mm
Drive	Flat rubber belt
Motor	AC
Chassis/Levelling	Solid brass/No
External PSU	Optional
No. of tonearms	2
Suspended	No
Dimensions	480 x 400 x 170 mm

Stabi SD turntable, Stogi S tonearm, armboard

Stabi Reference 2

Stabi Reference 2 turntable, AIR LINE tonearm, CAR-50 cartridge

For many years, the suspended sub-chassis turntable was the de facto standard for high-end performance. Originally, this meant lightweight, floating chassis designs, with the platter and arm isolated on a lightweight sprung surface. But since then, improved materials and understanding of isolation have enabled us to significantly advance the floating sub-chassis concept, improving stability and performance significantly.

The STABI REFERENCE 2 employs composite construction throughout, with the base, suspended chassis, armboard and platter all employing aluminium/acrylic sandwich construction, for superior rigidity and energy dissipation. The massive sub-chassis supports the platter and tonearm. Its high suspended mass supported on four sprung isolators, easily adjusted from above and tuned to a low 2.2 Hz frequency to optimise isolation without interfering with record replay. The 8 kg platter is internally rubber damped, topped with our unique hybrid rubber/textile mat and screw down clamp, and spins on an inverted, diamond polished bearing shaft and ruby ball. A specially selected, non-resonant, low-noise material is used for the thrust pad and sleeve ring with each contact point immersed in an oil bath to reduce friction and further eliminate mechanical noise.

The turntable base supports the suspension elements and twin AC motors that drive the aluminium sub-platter via a precision machined flat rubber belt. An outboard power supply feeds both motors with precisely generated sine waves, amplified by a pair of 20 W class A amplifiers. The dual drive, precisely machined parts (the platter exhibits a total rotational error of less than 0.02 mm) and stability of the low-frequency/high suspended-mass have helped the STABI REFERENCE 2 to redefine the speed stability and ultimately, the maximum performance capability of the suspended sub-chassis design.

Options

Armboards

Clamp included

External power supply included

Stabi Reference 2 turntable, 4POINT 9 tonearm, CAR-50 cartridge

Specifications

Total mass	40 kg
Platter mass	8 kg
Platter material	Aluminium & acrylic
Shaft diameter	16 mm
Bearing type	Ruby ball - inverted
Drive	Flat rubber belt
Chassis/Levelling	Aluminium & acrylic/Yes
Motors	2x AC
Power supply	Yes
No. of tonearms	1
Suspended	Yes
Dimensions	500 x 400 x 200 mm

Stabi R

Stabi R turntable, 4POINT 9 tonearm, CAR-40 cartridge

The STABI R is very much a modern take on an old concept – the turntable motor unit. At the dawn of high-end audio, hobbyists used to buy motor units and platters to build into home-made plinths. The STABI R offers the same opportunities for audio adventures, the same potential for cost-savings in producing a genuinely high-end record player, but it does so without imposing the necessity to apply your DIY skills.

By providing a selection of ready-made armboards and other options, the STABI R allows each owner to configure a unit specific to their needs, budget and aesthetic tastes. Of course, if you fancy a bit of woodwork – or even construction in more advanced materials – the STABI R allows that too ...

The massive chassis is machined from a solid block of aluminium and, even after the necessary voids and hard-points have been created, weighs over 25 kg. It sits on four adjustable feet to facilitate easy levelling and supports the proven, precision main-bearing and platter components from the STABI REFERENCE 2 turntable. These consist of an inverted bearing with a large diameter, diamond polished shaft, the sub-platter spinning on a ruby ball. The mass of the 8 kg main platter is supported by a thrust pad and sleeves of a specially selected, low-noise, non-resonant material, with both the thrust pad/ball interface and the sleeve ring running in dedicated oil baths to further reduce friction and mechanical noise.

Our sophisticated three-phase DC motor and stiff, precision-machined polymer belt, deliver the speed stability and dynamics of direct or idler drive systems along with the acoustic isolation of belt-drive. Both the motor and its power supply are internal to, but mechanically and electrically isolated from the plinth, speed being electronically selected via two discrete buttons, inlaid in the top of the plinth. The high-torque motor and stiff belt accelerate the platter from stationary to 33.3 RPM in under two seconds – or a single revolution of the record.

Finishes

American walnut

RAL finishes (optional)

The STABI R's chassis and metal armboards can be finished in a range of internationally accepted RAL colors. Please contact Kuzma or your local distributor for options and prices.

Kuzma Wood Plinth (optional)

For those who want all of the sonic benefits of the high-performance STABI R motor unit in a compact package of more conventional yet still modern appearance – and don't want to get out their woodworking tools – we offer a beautifully crafted wooden plinth that fits over the STABI R motor unit and supports tonearms of up to 12" in length. With an elegant profile built in Walnut, the Kuzma Wood Plinth combines the considerable musical advantages of the STABI R with an aesthetic to suit any domestic environment.

Arm mounting options

Side Mounted Arm Wing

This two-part, milled from solid armboard is machined in dedicated left and right-hand versions that can be mounted on either side of the STABI R motor unit. The cantilevered support element is topped with a separate arm board, the two-part construction inhibiting resonance and allowing the arm-mount to be changed to accept a different arm should you upgrade at a later date. A maximum of two arms can be mounted using the Side Mounted Arm Wing.

Arm Balcony

A simple, one piece angle bracket that bolts directly to the side of the Stabi R plinth. Pre-drilled for a specific arm, the Arm Balcony allows users to mount up to two tonearms, one in the conventional position and one across the back of the deck. Two different models are available, compatible with arms with a P2S mounting distance equivalent to either 9" or 12" arms of conventional design. Both versions of the Arm Balcony can be used in conjunction with either the Side Mounted Arm Wing or one or more Arm Holders to accommodate multiple tonearms on a single STABI R motor chassis.

Arm Holder

A tear-drop shaped arm mount, the narrow end can be fixed to any of the top-mounted bosses fitted to all four corners of the STABI R chassis. By adjusting the angle at which the Arm Holder is set, users can alter the P2S mounting distance to accommodate any conventional tonearm of up to 12" effective length, or longer still if the arm uses an off-set mount. With careful selection of tonearms and their arrangement, the Arm Holder allows owners to mount a maximum of four tonearms on the STABI R chassis. Drilled for Kuzma mount as standard, the Arm Holder can also be drilled to accept other tonearms with effective lengths between 9" and 12".

Specifications

Total mass	36 kg
Platter mass	8 kg
Platter material	Aluminium & acrylic
Shaft diameter	16 mm
Bearing type	Ruby ball - inverted
Drive system	Proprietary, non flexible belt
Chassis/Levelling	Aluminium/Yes
Motors	1x three-phase DC
Power supply	Yes (internal)
No. of tonearms	1 + 3 optional
Suspended	No
Dimensions	480 x 380 x 180 mm

Options

Armboards

Clamp

Arm holder multi

Stabi M

Stabi M turntable, 4POINT tonearm

Finishes

American walnut
(optional)

Brass finish
(optional)

RAL color finish
(optional)

The STABI M incorporates the very latest thinking and materials along with the appearance and practical advantages of classic designs. It's an approach encapsulated in the lid, perhaps the first ever, fully engineered, low-resonance lid fitted to a record player!

Despite the solid look and feel of the plinth, it is constructed from multiple elements and layers, machined from solid brass and aluminium and designed specifically to transfer and dissipate energy generated within the deck as well as isolating the sensitive stylus/record interface from external mechanical vibration. The massive external, peripheral frame supports the mechanical elements, the removable armboard, main-bearing and platter mounted on an extremely rigid, independent top-plate, supported on four sophisticated isolation mounts. These allow the record and tonearm to be precisely levelled from above, while also isolating them from external interference, whether from the motor or outside of the deck. The large footprint and removable armboard means that almost any tonearm, even the 4Point 14 can mounted under the lid. The platter assembly combines the proven, ultra-quiet main bearing from the STABI REFERENCE and R, with its massive, diamond-polished and inverted shaft, ruby ball, low-noise thrust pads and oil baths with a heavier 12 kg laminated and internally damped aluminium/acrylic platter. The high-torque DC motor is mounted in a dedicated brass housing incorporating three layers of mechanical isolation between it and the turntable base-plate and fed from a high-quality external power supply that incorporates precise pitch control. It drives the sub-platter using a proprietary, non-elastic, precision-machined polymer belt, the stability of the relationship between motor and platter along with the lack of rotational error in the moving parts delivering the dynamic range and speed stability of idler or direct drive systems but without their high noise-floor and mechanical breakthrough.

The platter is topped with our own, specially developed rubber/textile record support surface and the Kuzma screw-down clamp. The high-torque drive system ensures superb speed stability but also allows the acceleration of the platter from stationary to 33.3 RPM is under two seconds – less than a single revolution of the record. A remote control start facility means that you'll never miss those opening bars again.

With its sophisticated, massive, mechanically-layered plinth system, silent bearing, heavily laminated platter and non-resonant lid, the STABI M goes further in isolating the fragile stylus/record interface from the outside world than any other standalone record player – meaning that you hear more detail and are brought closer to the live event than ever before.

STABI M — an unrivalled combination of performance and practicality.

STABI M Plug and Play — The STABI M can be supplied Worldwide, as a complete record replay solution, precisely set up in the factory with a 4Point tonearm and CAR cartridge.

Specifications

Total mass	60 kg
Platter mass	12 kg
Platter material	Aluminium & acrylic
Shaft diameter	16 mm
Bearing type	Ruby ball - inverted
Drive	Proprietary non flexible belt
Chassis/Levelling	Aluminium/Yes
Motor	1x three-phase DC
Power supply	Yes (Remote Start)
No. of tonearms	1
Suspended	Yes
Dimensions	600 x 500 x 280 mm

Options

Armboards

Remote included

Clamp included

External power supply included

XL DC

XL DC turntable, 4POINT tonearm, CAR-60 cartridge

Finishes

Black color finish
(black or brass finish is standard)

RAL color finish
(optional)

Sometimes the simplest solution is the best. We first introduced the concept of a modular turntable in which each of the principle elements (platter, tonearm and motor) were completely separate and independent in 2002. Building on our established designs and materials, we created massive standalone structures that admit no mechanical compromise and are heavy and stable enough to maintain their precise placement despite the total absence of physical contact.

On the XL DC, everything is oversized, from the huge 22 kg aluminium/acrylic laminated and internally damped platter to the massive 28 mm diameter diamond-polished inverted bearing shaft and ruby ball that support it, the solid brass housing that supports the bearing to the oil baths and proprietary thrust pad and sleeve that ensure silent running. The high-torque DC motor is housed in another, massive standalone brass housing, driving the platter via our unique, non-elastic, precision machined polymer belt. Complete physical separation of the motor and platter together with the rotational accuracy of the moving parts, the stiff belt and the external power supply ensure both remarkable speed stability, precision pitch control and ultra-quiet operation.

The XL DC's machined from solid brass arm tower is a mechanical work of art. Totally independent of the platter/main bearing, it can be placed to accommodate any tonearm of any length – and is heavy enough to remain exactly where it's put. But more than just heavy, it is clever too, incorporating continuous, zero-play height adjustment, complete with re-settable digital readout in 0.01 mm increments, allowing precise settings for each cartridge/record combination. VTA adjustment on the fly has never been so precise or so repeatable. Completely free-standing, you can use as many as four XL arm-towers at any one time.

To extract the tiniest of analogue signals requires the most massive and rigid structures. Despite the cleverest engineering, there's no substitute for sheer mass – and the XL DC turntables are as massive – and as musically magnificent – as possible.

Note: Any XL DC turntable can also be rebuilt into the flagship XL AIR.

Specifications

Total mass	77 kg
Platter mass	22 kg
Platter material	Aluminium & acrylic
Shaft diameter	28 mm
Bearing type	Ruby ball - inverted
Drive	Proprietary non flexible belt
Chassis/Levelling	Solid brass/No
Motor	1x three-phase DC
Power supply	Yes
No. of tonearms	1 + 3 optional
VTA adjustment	Yes
Dimensions	450 x450 x 300 mm

Options

(brass or black finish)

Tonearm towers

Armboards

Control pad included (black or brass finish)

Clamp included (black or brass finish)

External power supply included

XL AIR

XL AIR turntable, 4POINT tonearm, CAR-60 cartridge

Finishes

Brass color finish
(brass or black finish is standard)

RAL color finish
(optional)

The XL DC turntable demonstrates that, when it comes to record replay, measuring the smallest deflection of the stylus in the groove, measuring that deflection against a stable reference, in a system that accepts no compromise for price or practicality, then there is no substitute for sheer mass. The XL AIR is our flagship turntable, a record player that takes that concept and the search for ultimate performance to its logical extreme.

Adding an additional, cast bronze damping layer to the existing XL platter increases rotational inertia and significantly improves its critical resonant behaviour. Doubling the weight of the XL DC's already massive platter from 22 to 44 kg is a huge step towards records reproducing reality – but it's not without its own challenges. The massive weight increase reduces the platter's mechanical signature but also means that the friction levels generated in a conventional bearing would generate unacceptable mechanical noise, undermining any advantage, so we have chosen to employ an air-bearing to support the increased load, a close tolerance, high-pressure bi-axial design. The huge surface areas of the bearing's inner and outer faces are separated by a gap of 0.005 mm. The compressor fills that gap with high-pressure air that floats the bearing yet delivers vertical and horizontal rigidity, reducing rotational resistance to almost zero.

The combination of the massive platter, zero friction air-bearing and the increased height and weight of the XL AIR arm-towers delivers an incredibly low noise-floor, convincing musical scale, presence and dimensionality, dynamics that match live performance. Bringing records to life, matching the vivid drama of the live event, demands the best. That best is the Kuzma XL AIR.

XL AIR – when only the best will do.

Specifications

Total mass	100 kg
Platter mass	44 kg
Platter material	Alumimium, acrylic & bronze laminated
Bearing type	Air bearing
Drive	Proprietary non flexible belt
Chassis/Levelling	Solid brass/No
Motor	1× three-phase DC
Power supply	Yes
No. of tonearms	1 + 3 optional
VTA adjustment	Yes
Dimensions	450 x 450 x 300 mm
Compressor dimens.	240 x 450 x 470 mm
Compressor weight	28 kg

Options

(brass or black finish)

Tonearm towers

Armboards

Control pad included (black or brass finish)

Clamp included (black or brass finish)

External power supply included

Stogi S

Kuzma's STOGI S uni-pivot tonearm is the gateway to a world of high-quality record replay, giving owners access to the fantastic musical performance of vinyl records. Despite its apparent simplicity, the mechanical elements of the STOGI S have been painstakingly refined and its geometric and mechanical characteristics exactingly executed to provide the maximum possible performance.

The parts for the STOGI S are almost entirely machined from solid aluminium or brass, carefully shaped and combined to deliver structural integrity and minimise resonance. Typical of this attention to detail is the uniquelyshaped head-shell element. Carefully machined from a single billet to provide a perfectly smooth and rigid interface for the top of the cartridge – essential if spurious mechanical energy is going to be transmitted away from the sensitive generator mechanism in the pick-up – the elegant, cylindrical segment is bonded directly into the damped aluminium arm-tube to maximise energy transfer.

The arm-tube assemble rides on a hardened steel, polished pivot that ensures extremely low friction and rattle free bearing with zero play. The low slung bearing housing and its massive surface contact with the damping well controls resonance and provides stability to the arm in operation. Two brass counterweights allow easy adjustment of tracking force with separate lateral grub screws for the precise setting of azimuth. The high-quality tonearm cable runs in a single, uninterrupted piece from head-shell to RCA phono connectors, while it is also possible to specify the STOGI S for balanced XLR connection or with a 5-pin Din connector to accept standard tonearm cables.

Spare parts

Counterweights

S armbase optional

Specifications

Effective length	229 mm
Arm mount (P2S)	212 mm (Kuzma cut-out)
Bearing type	Uni-pivot
Effective mass	11 g
Total mass	690 g
VTA adjustment	Yes
Azimuth	Yes
Damping	Yes
Wiring	High-quality copper

Stogi S 12

The Kuzma STOGI S 12 is a direct development of the STOGI S uni-pivot tonearm. It shares essentially the same materials and construction as the 9″ tone-arm, but its increased 12″ effective length results in significantly lower levels of tracing distortion.

The S 12 tone-arm uses exactly the same construction with low-friction, heavily damped bearing design as the shorter arm, but it's increased effective mass requires three, eccentrically mounted brass, compound counterweights to allow for different cartridge types/weights and easy adjustment of tracking force and azimuth. Despite the longer arm-tube, the S 12 still uses uninterrupted, one-piece arm-cables from headshell to RCA phono connectors. It also offers the same balanced XLR or 5-pin Din socket termination options as the standard arm.

Spare parts

Counterweights

S armbase included

Specifications

Effective length	305 mm
Arm mount (P2S)	291 mm (Kuzma cut-out)
Bearing type	Uni-pivot
Effective mass	12 g
Total mass	810 g
VTA adjustment	Yes
Azimuth	Yes
Damping	Yes
Wiring	High-quality copper

Stogi S 12 VTA

The STOGI S 12 VTA combines the superbly stable platform provided by the STOGI S-type bearing and the ultra-low tracing distortion of the 12″ tonearm, with the ability to precisely adjust arm-height and thus VTA/SRA on a record by record basis or even on the fly.

By using an offset mounting and a rigidly coupled VTA tower, the STOGI S 12 VTA actually mounts at the same distance from the turntable spindle (P2S) as the 9″ arm, ensuring compatibility with the widest range of turntables and plinths, even those with skeletal chassis construction or small armboards.

The large diameter VTA tower provides zero-play adjustment of arm-height in increments as small as 0.01 mm, allowing precise alignment of the stylus with the groove face for optimum retrieval of information and the most natural musical replay. Such tiny adjustments might seem almost irrelevant, but in practice they are easily heard and the fact that you can alter arm-height as the record is playing means that with surprisingly little experience, adjustment for optimum performance is easily achieved.

With the same termination options as the other STOGI S models and minimum tracing distortion due to its 12″ effective length and precision VTA adjustment, the level of performance achievable with the STOGI S 12 VTA means that it will be perfectly at home in the most ambitious systems, regardless of price.

Spare parts

Counterweights

Armbase Kuzma optional

Specifications

Effective length	305 mm
Arm mount (P2S)	212 mm (Kuzma cut-out)
Bearing type	Uni-pivot
Effective mass	12 g
Total mass	1750 g
VTA adjustment	Precise VTA tower
Azimuth	Yes
Damping	Yes
Wiring	High-quality copper

Stogi

The original Stogi arm was Kuzma's first product. Introduced in 1983, its medium mass, highly rigid design was a response to the lighter, low-mass tonearm designs of that time whose flimsy construction was not capable of coping with the mechanical energy generated by the best MC cartridges.

Establishing the production methods the company has followed ever since, all parts are machined from solid aluminium or brass blocks. The rigid and rigidly mounted head-shell provides stable cartridge mounting, while the internally damped arm-tube fits directly into the massive bearing housing, an effective route for the dissipation of vibration or noise. Parts are interference fit, with bonding adding even greater rigidity and damping.

Four close tolerance ball-race bearings are employed in a classic, coincident gimbal arrangement. Derived from gyroscopes and astronomical instruments, these bearings exhibit extremely low friction and zero play, that performance maintained by careful assembly of the incredibly rigid bearing cradles.

A decoupled brass counterweight controls balance and adjusts tracking force, with VTA and azimuth adjustable and locked using set-screws. A single-piece of high-quality Kuzma arm cable runs from the cartridge tags to the RCA plugs, although this can be terminated for balanced XLR or 5-pin Din connection if required.

Spare parts

Counterweights

Stogi armbase included

Specifications

Effective length	229 mm
Arm mount (P2S)	212 mm (Kuzma cut-out)
Bearing type	Precision ball-race bearings
Effective mass	12 g
Total mass	870 g
VTA adjustment	Yes
Azimuth	Yes
Wiring	High-quality copper

Stogi Ref

The STOGI REF tonearm is a direct development of the original STOGI design, employing a tapered arm-tube, together with structural and material changes to further increase overall rigidity and energy transfer.

The sophisticated, tapered, internally damped, two-piece arm-tube is at the heart of the STOGI REF. Designed to be inherently low resonance, it is machined from a solid aluminium alloy rod, incorporating a long-overlap sleeve joint to provide maximum surface area and rigidity, while still allowing incredibly precise and repeatable adjustment of the critical azimuth setting, via the zero-play, lateral worm drive and hairline reference. Where many arms use a one-piece construction and eliminate azimuth adjustment, thus compromising cartridge alignment and performance, the STOGI REF arm-tube is both rigid AND precisely adjustable, making azimuth (and cartridge) optimisation easier than ever before.

The vertical bearings are housed in a massive, brass cradle that further improves energy transfer to the outer gimbal housing, which along with the arm's other parts and termination options are drawn directly from the proven and highly-regarded STOGI design. With increased levels of rigidity and improved ease of alignment, the STOGI REF delivers a significant step up in musical performance over the original model.

Spare parts

Counterweights

Stogi armbase included

Specifications

Effective length	229 mm
Arm mount (P2S)	212 mm (Kuzma cut-out)
Arm tube	Conical taper
Bearing type	Precision ball-race bearings
Effective mass	12 g
Total mass	870 g
VTA adjustment	Yes
Azimuth	Precision worm drive
Wiring	High-quality copper

Stogi Ref 313

STOGI REF 313 is, as its name suggests, a 12.3″ (313 mm) long version of the standard 9″ STOGI REF tonearm. It shares many of the same materials and parts as the 9″ tone-arm, but its increased 12.3″ effective length results in significantly lower levels of tracing distortion and with carefully considered upgrades to key components,further improves musical performance.

The 12.3″ arm-tube features exactly the same sleeve joint and precision worm drive for easy and repeatable azimuth adjustment, but also features a unique, ultra rigid removable head-shell, designed to make set up or cartridge swapping considerably easier. The hexagonal shaft on the one-piece machined cartridge carrier is a positive fit into the socket on the end of the arm-tube, locking securely in place with a captive grub screw. The bearing housing is identical to the standard STOGI REF, but the bearings themselves are ultra low friction, close tolerance, zero play, low noise and starting torque ceramic ball bearings that lower friction levels, further reduce bearing chatter and improve energy transfer.
A larger diameter and carefully profiled counterweight keeps the balancing force and moment of inertia as close to the central pivot point as possible, also aiding tracking and the generator's freedom of movement. The STOGI REF 313 retains the one-piece arm-wiring and termination options of the other STOGI series tonearms.

Combined with the reduced tracing-distortion of the increased effective length, these carefully executed upgrades deliver a substantial improvement in technical and overall musical performance.

Spare parts

Stogi Ref 313 headshell

Fingerlift

Stogi armbase included

Specifications

Effective length	313 mm
Arm mount (P2S)	300 mm (Kuzma cut-out)
Arm tube	Conical taper
Bearing type	Precision ball-race bearings
Effective mass	13 g
Total mass	980 g
VTA adjustment	Yes
Azimuth	Precision worm drive
Wiring	High-quality copper

Stogi Ref 313 VTA

The STOGI REF 313 VTA combines the longer arm-tube, detachable head-shell, easily adjusted azimuth and close-tolerance ceramic bearings of the standard 313 version, with Kuzma's zero-play, precision VTA tower to give users the ability to precisely adjust arm-height and thus VTA/SRA on a record by record basis or even on the fly.

By using an offset mounting the STOGI REF 313 VTA actually mounts at the same distance from the turntable spindle (P2S) as the 9" STOGI arm, ensuring compatibility with the widest range of turntables and plinths, even those with skeletal chassis construction or small arm-boards.

The large diameter VTA tower provides continuous zero-play adjustment of arm-height in increments as small as 0.01mm, matching the precision nature of the STOGI REF 313's ceramic bearings, allowing precise alignment of the stylus with the groove face for optimum retrieval of information and the most natural musical replay. Such tiny adjustments might seem almost irrelevant, but in practice they are easily heard and the fact that you can alter arm-height as the record is playing means that with surprisingly little experience, adjustment for optimum performance is easily achieved.

With the same termination options as the other STOGI models and minimum tracing distortion due to its 12.3" effective length and precision VTA adjustment, the level of performance achievable with the STOGI REF 313 VTA means that it will be perfectly at home in even the most ambitious systems, regardless of price.

Spare parts

Stogi Ref 313 VTA headshell

Fingerlift

Armbase Kuzma included

Specifications

Effective length	313 mm
Arm mount (P2S)	212 mm (Kuzma cut-out)
Arm tube	Conical taper
Detachable headshell	Yes
Bearing type	Ceramic ball-race bearings
Effective mass	13 g
Total mass	2010 g
VTA adjustment	Precision VTA tower
Azimuth	Precision worm drive
Wiring	High-quality copper

4Point

The vast majority of tone-arms use uni-pivot or ball-race gimbal bearings, like our STOGI and STOGI S series arms. But for the 4Point tonearms Kuzma has developed a unique and superior bearing arrangement that offers the incredibly low friction and freedom of movement of a uni-pivot along with the rigidity and stability of ball-races.

Based around incredibly sharp, hardened steel points and sapphire cups to fix their positions, the 4Point bearing maintains perfect geometry, excellent energy transfer and the lowest possible levels of vertical and lateral friction, providing the cartridge generator with a stable working reference and freedom from motional resistance or interference. Differential damping troughs are provided for lateral and vertical movement, an arrangement that allows further fine tuning of the tonearm/cartridge relationship, to maximise musical performance. Combining the 4Point bearing system with an 11" version of our established two-part, tapered and damped arm-tube and our proven zero-play VTA tower creates a tonearm that offers lower tracing distortion than a standard 9" arm. Repeatable precision alignment of all cartridge parameters and a rigid yet detachable headshell together with the versatility of medium effective mass and a standard 9" mounting distance (P2S) makes the 4Point arm compatible with almost all turntables.

The counterweight system employs composite brass weights to ensure that the main balance weight is as close as possible to the pivot point, ensuring minimum inertia, a secondary, low-mass weight being used to fine-tune VTF. Azimuth is of course handled by our zero-play sleeve-joint and worm drive arrangement, which provides incredibly precise rotational adjustment around a hairline reference point without any compromise in rigidity or energy transfer. You can even lift the entire arm top free from the bearing, allowing you to replace it with a second arm/cartridge combination, while preserving every minute aspect of cartridge alignment and set up. With a choice of different, one-piece cable runs or termination boxes, the 4Point tonearm system really is the most complete and versatile analogue replay solution in existence. It brings record replay closer to live performance than ever before.

Spare parts

4Point headshell

Armbase Kuzma included

Specifications

Effective length	280 mm (11 inch)
Arm mount (P2S)	212 mm (Kuzma cut-out)
Arm tube	Conical taper
Detachable headshell	Yes
Bearing type	Kuzma 4point
Effective mass	18 g
Total mass	2050 g
VTA adjustment	Precision VTA tower
Azimuth	Precision worm drive
Damping	Precisely and separately adjustable for vertical and horizontal damping
Wiring	High-quality silver

4Point 9

The 4Point 9 is a shorter and simpler tonearm built around the unique 4Point bearing system. Using a standard post and collar arrangement for height adjustment allows us to dispense with the precision VTA tower, significantly reducing the overall mass of the tonearm, making it both more affordable and more compatible with a wider range of (especially lightweight suspended) turntables, bringing the sonic and musical advantages of the 4Point performance to more systems and a wider audience.

Like all Kuzma arms, the 4Point 9's parts, including the sophisticated, two-part tapered arm tube and are machined from solid aluminium or brass blocks.

Despite superior mechanical integrity achieved, there is no compromise in the adjustability of cartridge alignment parameters so vital to the best analogue replay. Every aspect of cartridge attitude can be precision adjusted – minutely and repeatedly. The brass counterweight moves on a fine thread for precision adjustment of VTF and once set, locks in place. Like the longer 4Point arms, the entire arm-wand and counterweight assembly can be removed to allow the swapping of cartridge/arm assemblies while retaining every aspect of cartridge alignment.

The 4Point 9 employs a one-piece, high-quality, Kuzma specified silver arm-lead that runs from cartridge tags to RCA connectors, although users can specify either balanced XLR or 5-pin Din termination as alternatives. Simpler in use, more widely compatible and more affordable to own, the 4Point 9 makes bringing live music home easier than its ever been.

Spare parts

4Point 9
headshell

Armbase Kuzma
included

Specifications

Effective length	229 mm
Arm mount (P2S)	212 mm (Kuzma cut-out)
Arm tube	Conical taper
Detachable headshell	Yes
Bearing type	Kuzma 4point
Effective mass	13 g
Total mass	920 g
VTA adjustment	Yes
Azimuth	Precision worm drive
Wiring	High-quality silver

4Point 14

The benefits of longer tonearms with the reduced tracing distortion that results, along with their reduced off-set angle and bias force requirement, have long been understood. But the challenges presented in terms of balancing the structural rigidity and effective mass of such long arm-tubes, together with the practicality of actually mounting tonearms longer than 12" on conventional record decks have always proved insuperable – until now.

Experience with the 11" version of the 4Point tonearm, with its precisely adjustable, differential damping revealed that many of the best moving-coil cartridges employ extremely low-compliance generators. Although their mechanical characteristics theoretically match the medium-mass tonearms in general use, their musical performance improved with the subtle application of damping – suggesting the possibility of using a slightly heavier tonearm. Kuzma's tapered, two-part arm-tube is machined from a solid rod, meaning that careful profiling would allow the creation of an arm with increased effective length combined with a minimal increase in effective mass and no compromise in adjustability or rigidity. Meanwhile, the use of our zero-play VTA tower, with its off-set mounting would mean that a 14" tonearm could be mounted at the same distance (P2S) as a standard 12" design …

Thus the 4Point 14 was born, a longer version of the standard 4Point tonearm, that retains all of the precision adjustability and practicality of the original in a design optimised to meet the mechanical requirements of the very best, low-compliance moving-coil cartridges. That means that you still get repeatable adjustment of VTA, Azimuth and VTF, differential damping, interchangeable arm-tops and detachable head-shells. You still get the superior, almost frictionless and ultra-stable performance of the 4Point bearing system and the superb sonic and musical performance of any 4Point series tonearm. But the 4Point 14 will bring you closer to the live performance than ever; closer because it's a better tonearm but closer too because it allows the best cartridges to perform at their best. The 4Point 14 is simply the ultimate analogue replay solution for the best systems in existence.

Spare parts

4Point 14
headshell

Armbase Kuzma
included

Specifications

Effective length	356 mm (14 inch)
Arm mount (P2S)	291 mm (Kuzma cut-out)
Arm tube	Conical taper
Detachable headshell	Yes
Bearing type	Kuzma 4point
Effective mass	19 g
Total mass	2150 g
VTA adjustment	Precision VTA tower
Azimuth	Precision worm drive
Damping	Precisely and separately adjustable for vertical and horizontal damping
Wiring	High-quality silver

Safir 9

Even the best component can be improved. The Safir 9 tonearm introduced in 2022, is result of years of knowledge, experience and our latest research and development. These, combined with exhaustive analysis of noise and vibration in other arms, have enabled us to produce a tonearm which further narrows the gap between live music and recording in a way previously unimaginable.

For the first time we have used a very rigid tube made from sapphire mono crystal with hardness, vibration damping and a stiffness ratio close to diamond. All other parts are machined from solid aluminium and brass blocks. The headshell provides stable cartridge mounting while the very rigid sapphire tube is fitted into a massive bearing holder where any vibration and noise is dispersed. Most parts are glued together for rigidity and damping.

The Kuzma 4point bearing system is used. We have modified both azimuth and VTA adjustments to minimise the effect of vibration and to neutralise noise with damping, while still maintaining easy use and repeatability of adjustments. A brass counterweight balances the arm and adjusts tracking force.

Wires are in one length from cartridge pins to RCA connectors. High quality wires are incorporated into our own cable. It is also possible to use the tonearm in a balanced (XLR) or 5 pin configuration.

Spare parts

Fingerlift

Armbase Kuzma included

Specifications

Effective length	229 mm
Arm mount (P2S)	212 mm (Kuzma cut-out)
Arm tube	Conical-sapphire
Bearing type	Kuzma 4point
Effective mass	60 g
Total mass	1250 g
VTA adjustment	Yes
Azimuth	Precision worm drive
Wiring	High-quality silver

Air Line

For some listeners, even the minimal tracing distortion of today's longer, pivoted tonearms is unacceptable. For them, only a linear-tracing tonearm, one that mimics the path of the cutting head will do.

The Kuzma AIR LINE is just such an arm, combining the structural integrity, machined from solid construction and precision adjustability of more conventional Kuzma tonearms, with a large surface area, inverted air bearing to allow linear tracking of the record groove.

The minimal, 0.005 mm air gap and solid steel shaft ensures structural rigidity and friction-free movement in both lateral and vertical planes. The zero-play VTA tower, worm-drive Azimuth adjustment and adjustable tension, locking counterweight ensure perfect cartridge alignment is achieved and maintained – without which the benefits of linear tracing are quickly diluted.

Maintaining a near-perfect phase relationship between the left and right channels, the Kuzma AIR LINE delivers all of the dimensional and rhythmic advantages that parallel tracking tonearms are renowned for, while overcoming the structural failings and practical issues that compromise the performance of other such designs. Its moderate vertical effective mass and the provision of a full-width damping trough to control lateral movement, ensures optimum performance from the widest possible range of matching cartridges. If you want to experience the ultimate stereo performance from your analogue records, then the AIR LINE can take you there.

Included


Armbase Kuzma


Air compressor


Air dryer filters

Specifications

Effective length	184 mm
Arm mount (P2S)	212 mm (Kuzma cut-out)
Arm tube	Conical taper
Bearing type	Air bearing
Effective mass	18 g vertical 80 g horizontal
Total mass	2270 g
VTA adjustment	Precision VTA tower
Azimuth	Precision worm drive
Damping	Precisely adjustable
Wiring	High-quality silver
Compressor dimens.	180 x 410 x 430 mm
Compressor weight	20 kg

Cartridges

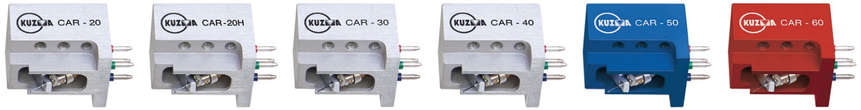

		CAR-20	CAR-20H	CAR-30	CAR-40	CAR-50	CAR-60
Type		Moving coil	High output MC	Moving coil	Moving coil	Moving coil	Moving coil
Coil wire		STD copper	STD copper	5N copper	4N silver	4N silver	4N silver
Cantilever Material		Aluminium	Aluminium	Boron	Boron	Sapphire	Diamond
Stylus		Synthetic elliptical	Synthetic elliptical	Microridge	Microridge	Microridge	Microridge
Typical figures	Frequency Response	10 Hz - 33 kHz	10 Hz - 33 kHz	10 Hz - 35 kHz	10 Hz - 40 kHz	10 Hz - 45 kHz	10 Hz - 45 kHz
	Output Voltage (3.54 cm / 1 kHz)	0.3 mV	2 mV	0.3 mV	0.3 mV	0.3 mV	0.3 mV
	Channel Balance (1 kHz)	<1 dB	<1.5 dB	<1 dB	<1 dB	<1 dB	<1 dB
	Channel Separation (1 kHz)	>23 dB	>21 dB	>25 dB	>30 dB	>30 dB	>30 dB
	Tracking Force	2.0 g	2.0 g	2.0 g	2.0 g	2.0 g	2.0 g
	Compliance	8×10^{-6} cm/dyne	8×10^{-6} cm/dyne	10×10^{-6} cm/dyne	10×10^{-6} cm/dyne	10×10^{-6} cm/dyne	10×10^{-6} cm/dyne
	Trackability	>70 µm/2.0 g	>60 µm/2.0 g	>70 µm/2.0 g	>70 µm/2.0 g	>70 µm/2.0 g	>70 µm/2.0 g
	Internal Impedance	4 Ω	130 Ω	4 Ω	6 Ω	6 Ω	6 Ω
	Load Impedance	<100 Ω	47 kΩ	<100 Ω	<100 Ω	<100 Ω	<100 Ω
Net weight		17 g	17 g	17 g	17 g	17 g	17 g

Accessories


Headshell container 1

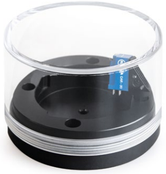
Headshell container 4

The Kuzma CAR cartridges are the result of close collaboration with an established Japanese cartridge manufacturer with over 50-years experience in the field. Exactingly constructed to our precise specifications, the CAR cartridges share the same design principles as our turntables and tonearms.

Each cartridge is built into our own, machined from solid housing, specifically designed to provide a stable, rigid support for the generator assembly and a perfect mechanical interface to the tonearm, thus ensuring maximum information retrieval and minimum distortion.

Although outwardly identical, each CAR model is specified with a stylus tip, cantilever and coil-windings of increasing quality and performance. The CAR-20 is available in both low and high-output versions, its pseudo-elliptical stylus profile and aluminium cantilever are chosen to maximise musical integrity, performance and long-term enjoyment over the superficial appeal of extra detail or 'sparkle'. Each step up the range improves specific aspects of construction or materials, improving sonic but never compromising musical performance, until we reach the flagship model, the CAR-60 which combines a superb Microridge stylus profile and silver coil-windings with a solid diamond cantilever, creating a cartridge to challenge the very best in existence.

Cartridge cap included

Accessories

Platis

Platis 54

Size	500 x 400 x 60 mm
Mass	13 kg
Loading	max 90 kg
Finish	black or silver

Platis 65

Size	600 x 500 x 60 mm
Mass	19 kg
Loading	max 120 kg
Finish	black or silver

Record players literally measure vibration, which obviously makes them extraordinarily sensitive to external, microphonic interference. What is less obvious is the vulnerability of all audio electronics to mechanical vibration. Noise coming through the structure of the building, the floor, from other audio components or from just playing music impact the component's housing and vibrate the sensitive electronics inside, masking or blurring the signal. The affects may be less apparent than with a turntable, but they are no less destructive to the sense and enjoyment of the musical signal.

To minimise this microphonic influence, components must be isolated from the room and each other via independent isolation platforms, used in conjunction with equipment stands or shelves. Using an incredibly sensitive vibrometer, we have analysed the interface between equipment and its supporting surface and developed our PLATIS isolation platform.

PLATIS 54 and PLATIS 65 are passive isolation platforms that filter structural vibrations and prevent them reaching sensitive audio components. The base frame is milled from solid aluminium, and provides locating tracks for the multi layered silicone and aluminium dampers so that they can be positioned to optimally support each component. In conjunction with the composite aluminium laminated top plate, these effectively filter vibration throughout the audible range. Adjustable feet also ensure that you can level each component independently, irrespective of its weight distribution, a crucial concern in both isolation and audio performance terms that is often overlooked when a whole system is installed in a single rack.

Wooden record weight

The musical virtues of African hard wood have long been recognised and exploited in the manufacture of flutes and clarinets. Kuzma RECORD WEIGHTS are machined from aged, solid African blackwood or Mopane and positioned over the spindle of the record player, helping to damp the resonances within the LP record. Its asymmetrical form offers two different sonic characteristics to suit different turntables and different recordings.

Size	D=83 mm, H=57 mm
Mass	333 gr (typical)

Outer clamp

The OUTER CLAMP is a peripheral record weight that will effectively flatten warped records, pressing them against the platter to provide improved tracking by the cartridge as well as better damping of the record itself by bringing it into increased contact with the supporting surface. The addition of significant weight beyond the platter's outer rim also delivers improved rotational stability. With an inner diameter of 316 mm the OUTER CLAMP is compatible with all Kuzma turntables and many others besides.

Size	D=330 mm, d=316 mm
Mass	1,3 kg

Equipment damper

The Kuzma Equipment Damper is a passive isolation foot based on the same multi-layer aluminium and silicon filter elements developed for the PLATIS equipment supports, but sandwiched between machined aluminium cups to create individual isolation feet that are available and can be used in sets of three or four. Without the mass, levelling facility or sophisticated composite top-plate of the PLATIS they are a simpler and more affordable solution to the critical problem of component isolation.

Size	D=80 mm, H=50 mm
Loading	0 - 20 kg per damper
Set of 3	max 60 kg
Set of 4	max 80 kg

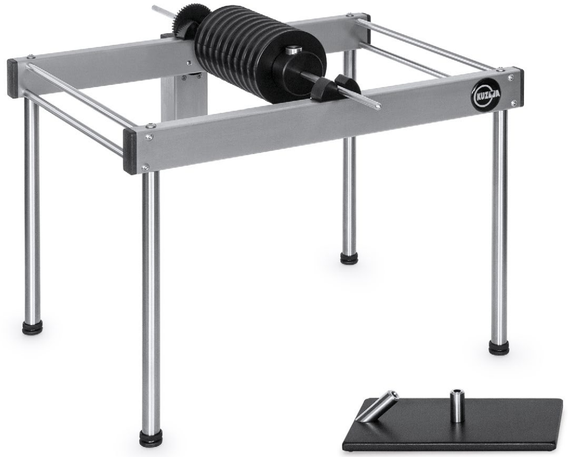

Ultrasonic bath not included.

RD Ultrasonic kit

For many years, there has been animated debate about how best to clean records. At one extreme are those who claim the stylus should be allowed to clean the groove and nothing else should ever touch the surface. At the other, are the various wash wet and suck dry systems – although these tend to be noisy and time consuming. However, more recently the audio industry has discovered the benefits of ultrasonic cleaning systems, originally developed for surgical instruments and jewellery. Undoubtedly superior to any other approach, dedicated record cleaning machines based on this technology are now the de facto standard for serious vinyl users. Unfortunately they are also slow and expensive ...

The Kuzma response is typically practical and cost effective. We have produced an adjustable frame that rotates records and can be positioned over a commercially available ultra-sonic bath. In this way we have created a system that leverages the low purchase price of generally available ultra-sonic machines, produced in their thousands for critical surgical and precision engineering applications, along with the ability to clean up to ten records, automatically in a single operation. The RD ULTRASONIC KIT can be set up anywhere, the cleaning cycle programmed and then it can simply be left to run until the cycle is complete. Simply return after the correct interval and retrieve your pristine discs for drying. The result is by far the most affordable and practical ultra-sonic cleaning system available.

The frame is machined from stainless steel with additional PVC parts. The kit also includes small bottles of isopropyl alcohol and wetting agent (tiny amounts of each being added to the filtered water used in the ultra-sonic bath) along with a carbon fibre cleaning brush and DC power supply for the motor. The complete kit can be assembled and set up in around 20 minutes – about the time it takes the ultra-sonic bath to reach operating temperature.

Turntable specifications

	Stabi S	Stabi SD	Stabi Reference 2	Stabi R	Stabi M	XL DC	XL AIR
Mass (kg)	13	15.5	40	36	60	77	100
Platter mass (kg)	4.8	4.8	8	8	12	22	44
Platter material	aluminium	aluminium	aluminium & acrylic	aluminium & acrylic	aluminium & acrylic	aluminium & acrylic	aluminium, acrylic & bronze
Bearing type	pointed shaft	pointed shaft	ruby ball – inverted	ruby ball – inverted	ruby ball – inverted	ruby ball – inverted	air bearing
Shaft diameter (mm)	10	10	16	16	16	28	–
Chassis / Levelling	brass / no	brass / no	aluminium & acrylic / yes	aluminium / yes	aluminium / yes	brass / no	brass / no
Turntable levelling	no	no	no	yes	yes	no	no
Motor (pcs)	1 AC	1 AC	2 AC	1 DC	1 DC	1 DC	1 DC
Belt	rubber	rubber	rubber	special	special	special	special
External power supply	optional	optional	yes	built-in	yes	yes	yes
Speed (rpm)	33 / 45	33 / 45	33 / 45	33 / 45	33 / 45	33 / 45	33 / 45
Armboard	no (optional)	no (optional)	yes	yes	yes	yes	yes
VTA adjustment	yes	yes	no	no	no	yes - VTA tower	yes - VTA tower
Number of tonearms	1 (+1 optional)	2	1	1 (+3 optional)	1	1 (+3 optional)	1 (+3 optional)
Suspension	no	no	yes (2.2 Hz)	no	special	no	no
Dimension (mm)	400 × 300 × 170	480 × 400 × 170	500 × 400 × 200	480 × 380 × 180	600 × 500 × 280	450 × 450 × 300	450 × 450 × 300
Finish	brass or black	brass or black	black	black	black	brass or black	brass or black
Clamp	optional	optional	yes	optional	yes	yes	yes
Mat	yes	yes	yes	yes	yes	yes	yes
Lid	yes	yes	no	no	yes	no	no
Accessories	oil, allen keys	oil, allen keys	oil, allen keys	oil, allen keys	oil, allen keys	oil, allen keys	oil, allen keys
Options	SD kit, 12 inch kit, armboards, power supply (adjustable 33, 45, 78 rpm), clamp, supporting platforms, different finishes	SD kit, 12 inch kit, armboards, power supply (adjustable 33, 45, 78 rpm), clamp, supporting platforms, different finishes	armboards	armboards, second tonearm wing, smaller tonearm holder, VTA tower, clamp, wodden frame, different finishes	armboards, different finishes	tonearm towers (14 kg), armboards, different finishes	tonearm towers (14 kg), armboards, different finishes

Tonearm specifications

	Stogi S	Stogi S 12	Stogi S 12 VTA	Stogi	Stogi Ref	Stogi Ref 313	Stogi Ref 313 VTA	4Point	4Point 9	4Point 14	Safir 9	Air Line
Effective length (mm)	229	304.8	304.8	229	229	313	313	280	229	356	229	184
Arm mount distance (mm)	212	291	212	212	212	300	212	212	212	291	212	212
Distance from spindle to horizontal bearing (mm)	212	291	291	212	212	300	300	264	212	342	212	–
Bearing type	unipivot	unipivot	unipivot	ball bearings	ball bearings	ball bearings	ball bearings	4 pivot	4 pivot	4 pivot	4 pivot	air bearing
Effective mass (g)	11	12	12	12	13	13	13	18	13	19	18	V: 13, H: 80
Total mass (g)	690	810	1750	870	800	980	2010	2050	920	2150	1000	2270
Offset angle (°)	23	17.8	17.8	23	23	17.4	17.4	19.5	23	15.2	23	0
VTA adjustment	yes	yes	VTA tower	yes	yes	yes	VTA tower	VTA tower	yes	VTA tower	VTA screw	VTA tower
Azimuth	yes	yes	yes	yes	worm drive	worm drive	worm drive	worm drive	worm drive	worm drive	worm drive	worm drive
Tube	straight	straight	straight	straight	conical	conical	conical	conical	conical	conical	conical sapphire	conical
Bias	yes	yes	yes	yes	yes	yes	yes	yes	yes	yes	yes	–
Maximum standard cartridge weight (g)	15	15	15	15	15	15	15	35	35	35	35	25
Optional light and heavy counterweight	yes	yes	yes	yes	yes	yes	yes	yes	yes	yes	yes	yes
Damping	yes	yes	yes	no	no	no	no	separate V & H	no	separate V & H	no	yes
Detachable headshell	no	no	no	no	no	yes	yes	yes (+ 1 spare)	yes	yes (+ 1 spare)	no	no
Arm mount	Kuzma & Stogi	Kuzma & Stogi	Kuzma & Stogi	Kuzma & Stogi	Kuzma & Stogi	Kuzma & Stogi	Kuzma	Kuzma	Kuzma	Kuzma	Kuzma	Kuzma
Standard wiring (RCA)	copper	copper	copper	copper	copper	copper	copper	silver	silver	silver	silver	silver
Accessories	protractors, allen keys, cartridge mounting screws	protractors, allen keys, cartridge mounting screws	protractors, allen keys, cartridge mounting screws	protractors, allen keys, cartridge mounting screws	protractors, allen keys, cartridge mounting screws	protractors, allen keys, cartridge mounting screws, headshells	protractors, allen keys, cartridge mounting screws, headshells	protractors, allen keys, cartridge mounting screws, headshells	protractors, allen keys, cartridge mounting screws, headshells	protractors, allen keys, cartridge mounting screws, headshells	protractors, allen keys, cartridge mounting screws	protractors, allen keys, cartridge mounting screws
Options	XLR / 5 pin, various wiring	XLR / 5 pin, various wiring	XLR / 5 pin, various wiring	XLR / 5 pin, various wiring	XLR / 5 pin, various wiring	XLR / 5 pin, various wiring	XLR / 5 pin, various wiring	XLR / 5 pin, various wiring	XLR / 5 pin, various wiring	XLR / 5 pin, various wiring	XLR / 5 pin, various wiring	XLR / 5 pin, various wiring

Technology

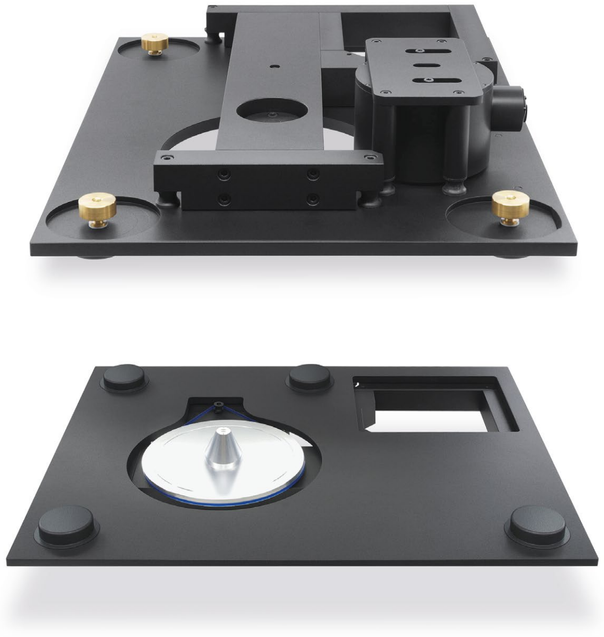

Partially assembled Stabi M turnatble.

Turntables

Motors
We use 24 pole AC or 3 phase DC motors with low noise bearings. Precision made pulleys ensure the smooth transfer of rotation via the precision made belt to the subplatter. The result is a uniform drive of the platter at any given moment.

Motor power supply
The power supply insulates motors from the mains supply and controls precise speed with pure signals, which minimise motor vibration and give uniform drive to the rotating platter.

Bearings
The carbon steel used for platter shafts is ground, lapped and finally diamond polished to give the finest low friction sliding structure. A unique damping, low friction and low vibration bearing material is used which minimises air slack and vibration inside the bearing. Vertical support is provided by a polished ruby ball immersed in an oil pool on top of the inverted shaft, in our top turntables.

Platters
Our smallest model has damping rubber material inserted into the solid aluminium, to prevent any ringing resonance. Other platters are multilayered of aluminium and acrylic topped with a special mat of textile and rubber compound. An additional weight or screw down clamp further controls record vibration. Rotational tolerances of our platters are below 0.02 mm.

Suspension
Most of our turntables are not suspended. Due to the design and construction of the chassis as well as the rigidity of individual parts, however, our turntables are not sensitive to outside disturbances. Solid aluminium, acrylic or brass is used to minimise internal and external vibration. Some turntables use a damped spring suspension system tuned to below 2.5 Hz to give extra insulation with no need for special turntable supports.

Armboards
Pre-cut armboards are available for all our turntables, thus making it possible to mount any tonearm, though our tonearms remain the best value for money.

VTA (vertical tracking angle) adjustments
Some of our turntables have a facility enabling adjustment of the tonearm's VTA even if the tonearm itself lacks this facility. Our top of the range turntable model has a precise VTA adjustment built into the tonearm tower, which allows VTA adjustment of ANY tonearm, regardless of type, in the repeatable range of 0.01 mm, without any loss of rigidity in the assembly.

Tonearms

Main structure
All parts are machined from solid aluminium or brass and are designed in such a way that, when assembled by screws or glue, structural rigidity is given to the tonearm. The effect on sound of even the smallest part is taken into consideration.

Bearings
Unipivot is the simplest and yet very effective, very low friction, zero play type of bearing. Sliding and rolling surfaces inside the bearing cup are specially pressed to give the lowest starting friction, zero play and minimal vibration inside the cup or pivot point.
4Point bearings are constructed with two points in the vertical bearing and two points in the horizontal bearing, giving this tonearm a unique bearing configuration with lowest possible friction, zero play and stability of the tonearm in all directions, except those which need as much freedom as possible. The ball bearings made by most worldwide manufacturers, while conforming to ABEC standards, are inadequate for our purposes due to dirt in grooves, on balls or in the bearing oil. We use the precise ball bearings which are used in gyroscopes. Each bearing is vacuum packed with its own serial number and we further individually test each bearing for noise and lubrication.

Air Line tonearm.

Only then are they precisely mounted into tonearms, with zero play preloading.
Air bearings are bearings with the lowest possible friction and, if used as in precision machinery, they also have the highest rigidity in all directions. If an air bearing is used with low pressure, or has only a few holes which blow air out, then the tonearm will float. This will give low friction but any small force exerted on the cartridge during play, will cause tonearm instability and prevent the cartridge from accurately reading what is in the grooves. We use a high air pressure porous graphite bearing which gives stable and precise positioning to an accuracy of below 0.001 mm. A force of even a few kg will not disturb the tonearm position.

Tonearm tubes
Most of our tonearms incorporate tubes machined from solid blocks of aluminium, though the internal construction is more complex than it looks. Conical tubes have less vibration than straight tubes. In addition the inside wall is not all the same thickness and, being made from two parts glued together, gives more damping and rigidity to the whole tube and the walls themselves.

Azimuth adjustments
Azimuth adjustment should be simple, easy repeatable and not adding any vibration and slack to the construction. We use counterweight eccentricity to set up azimuth in unipivot bearing tonearms, but precise azimuth adjustment is made by repeatable shifting of a screw inside the counterweight. The conical tubes contain a built-in worm drive, which allows precise tube rotation without any slack when the tube is rotating back and forth. The worm drive is immersed in damping grease. Locking the tube gives rigidity to the whole assembly.

VTA adjustment
The height of the tonearm can be adjusted in the arm-base. Our best tonearms incorporate a VTA tower, which allows for repeatable VTA adjustments of 0.01 mm, during play, in the range of 10 mm with zero play, so it is not even necessary to lock the VTA mechanism.

Detachable headshell
The use of a standard detachable headshell for ease of cartridge replacement is always accompanied by mechanical and electrical compromise. We have, however, created our own unique hex shape, five point holding fixing system, which holds the headshell in a precise and rigid position. This causes no structural weakness and is completely accurate. Electrical contacts are left intact as cartridge clips are unplugged from the cartridge.

Cables
Any breaks or solder joints in wires running from the cartridge to the phono input, are a compromise. We create our own cables using thin wires obtained from reputable audio cable manufacturers. These wires run from the cartridge clips to phono plugs in one continuous length, inside the insulated and shielded tubes in a balanced configuration.

KUZMA Ltd.
Jelenceva 1
SI-4000 Kranj
Slovenia, EU

Visit by appointment only.

tel: +386 4 253 54 50
fax: +386 4 253 54 54

kuzmaltd@siol.net
kuzmaltd@gmail.com

kuzma.si

Photo by Matjaž Žakelj & Kuzma archive
Designed by David Kladnik
Printed by Pro Grafika

KUZMA COLLECTION KC–2022

KUZMA COLLECTION KC–2022